MATERIAL:

- HOUSING-PBT POLYESTER UL94V-0
  MIXED GLASS FIBER.
  STANDARD COLOR-GRAY.
- CONTACTS-0.45mm DIAMETER PHOS-BRONZE
  PLATED WITH HARH GOLD.

CAVITY CONFIRMS TO FCC RULES AND REGULATIONS PART68,SUBPART F.

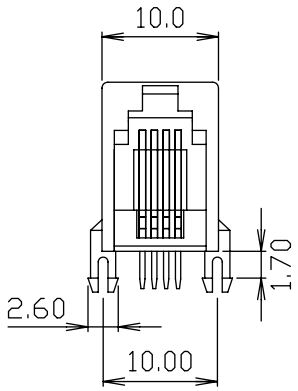

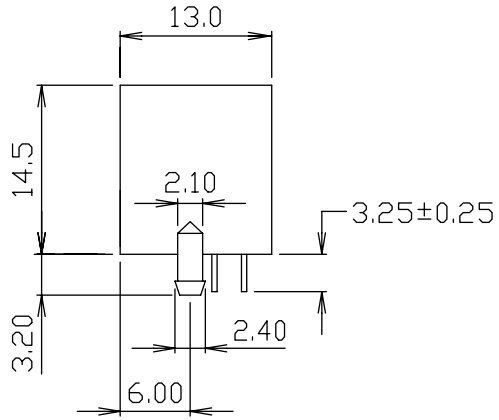

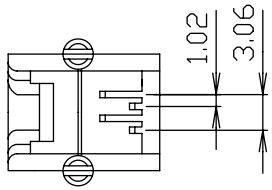

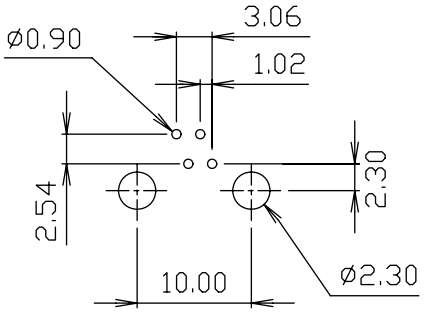

PC Board Layout
Ref.

Ordering Information

AJT87A	4	4	1	X
Type	Positions	Contacts	Ports	Plating 1 =6u" 3 =30u"

Tolerance unless otherwise specified mm
.0 ± .25
.00 ± .13
.000 ± .05

RIA CONNECT	P/N: AJT87A441X
Desc.: Side entry, thru hole modular jack	
Date: 12-07-09 Dimensions in mm	Drawn By: Donna Mears Verified By: Mike Balekdjian

MATERIAL: HOUSING-PBT POLYESTER UL94V-0
MIXED GLASS FIBER.
STANDARD COLOR-GRAY.
CONTACTS-0.45mm DIAMETER PHOS-BRONZE
PLATED WITH HARH GOLD.
CAVITY CONFIRMS TO FCC RULES AND REGULATIONS
PART68,SUBPART F.

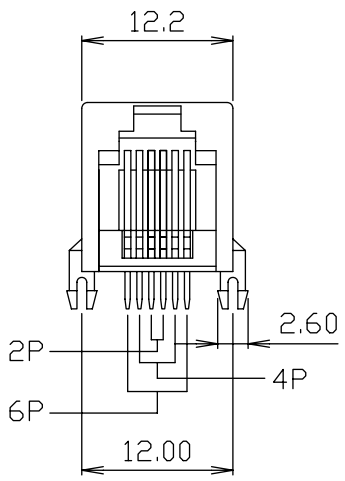

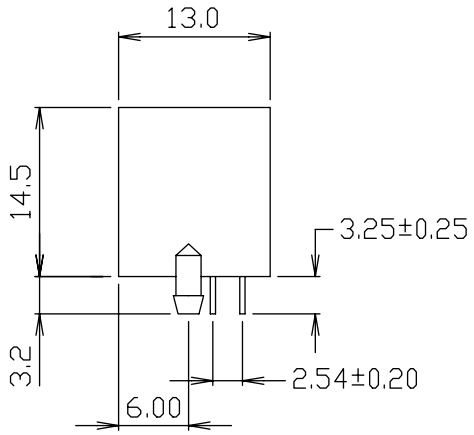

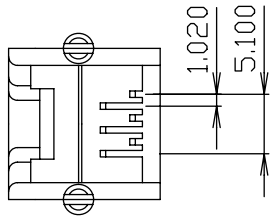

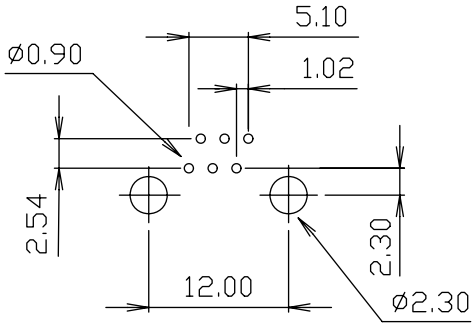

PC Board Layout

Ordering Information

AJT87A	6	6	1	X
Type	Positions	Contacts	Ports	Plating 1 = 6u" 3 = 30u"

Tolerance unless otherwise specified mm
.0 ± .25
.00 ± .13
.000 ± .05

RIA CONNECT	P/N: AJT87A661X
Desc.: Side entry, thru hole modular jack	
Date: 12-07-09 Dimensions in mm	Drawn By: Donna Mears Verified By: Mike Balekdjian