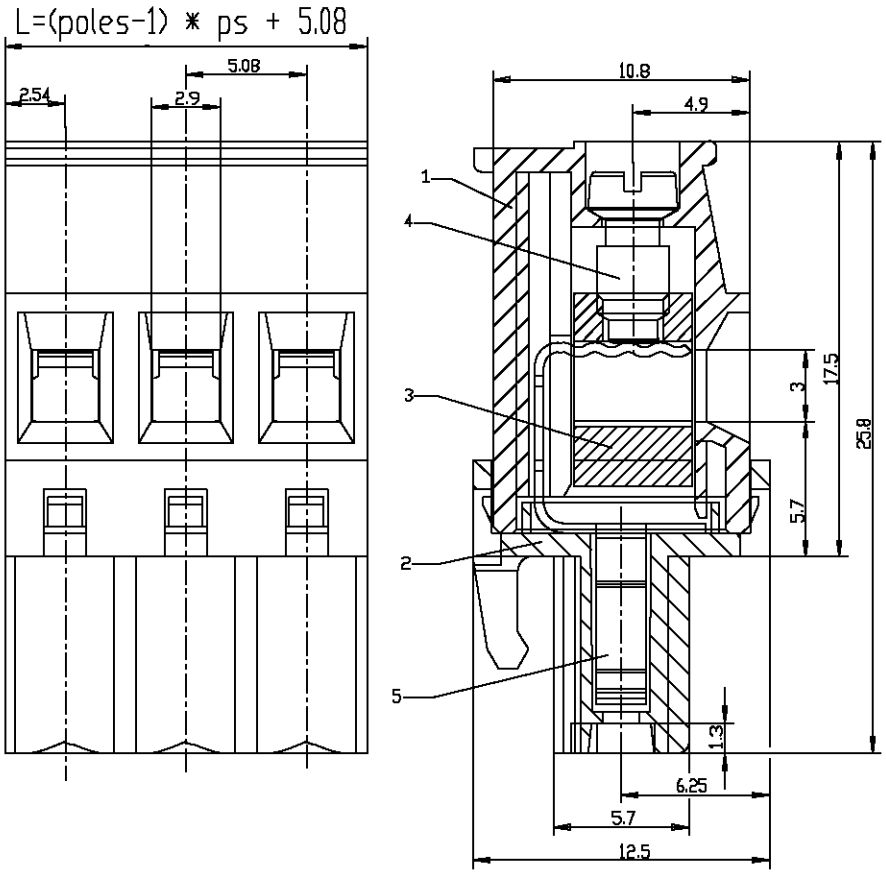

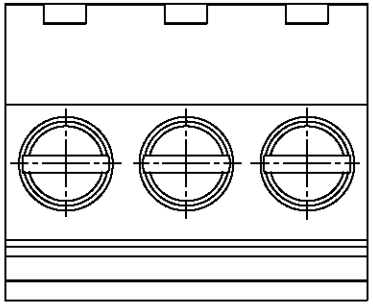

Technical Data

Insulation co-ordination according to DIN/VDE 0110-1 04.97	according to: UL		VDE	
pin spacing	0.200 in.	0.400	5.08mm	10.16mm
voltage	300V	600V	250V~eff	630V~eff
			according to VDE 0110 degree of contamination 3	
Insulation material group			Insulating material I: 600 ? CTI	
minimum clearances or creepage distances			3.2mm at connected solid wire Ø2.3mm	
maximum current	12A /AWG12		12A /4mm?	
tightening torque at connected nominal diameter	4.5 lb-in		0.5 Nm max.	
wire range	AWG Cu, Sol/Str wire No. 28-12		Ø0.3mm - Ø2.3mm	
rated cross section mm?	single-wire 4	stranded wire 2.5	AWG 12	
contact resistance	<5mΩ at I=500mA after 100 plug-contacts per pole from the clamping point via the header to the printed-circuit board			
withdrawing force	per circuit 1.0N .. 3.0N			
max. limiting temperature	+125°C			
min. limiting temperature	-40°C			
climatic class	40/125/56 according to DIN IEC 68-1			
type of protection according to IEC 529	IP 20 at connected nominal diameter			
number of poles	2 - 24 poles			
wire strip length	8mm			
approvals				

Materials

item 1	insulating body part-no. 711853-213-02-2	PA 66 Frianyl A63 V0 black (unbreakable) flame resistant and self-extinguishing, according to UL 94V-0, stated under the File-No. E86034 (N)⌋ temperature range -40°C to +125°C, for short time up to +185°C
through	part-no. 711853-213-24-2	
item 2	terminal molding cover part-no. 711854-213-02-2	
through	part-no. 711854-213-24-2	
item 3	connector body M3 part-no. 718503-0116	brass CuZn39 Pb2 4Am nickel plated
item 4	terminal screw M3 part-no. 795059-01	steel quality 8.8 4mm nickel plating over 8Am copper plating (standard)
item 5	wire protector detached part-no. 717176-01 or wire protector on strip part-no. 717176-02	copper alloy CuSn6 0,8 - 3,3Am tin plated

(01)

Verwendungsbereich				Zul.Abw.	Oberfläche	Maßstab 5:1	Gewicht
						Werkstoff, Rohteil	Werkstoff-Artikelnummer
					Datum	Name	Benennung
				Bearb:	27.05.98	R:sch	data sheet series type 213 ps 5.08mm
				Gepr:			
				Norm			
01	1 x 01 3M 467/99	22.11.99	Stool	RIA		Artikelnummer 31213	Teile-Code 9-7232
Zust.	Änderung	Datum	Name	CAD-Nr.:	0000000000005u	Ers.d.:	Ers.f.:

Blatt 1 v.1 Bl.

Eine unsere vorherige Zustimmung darf diese Zeichnung weder vervielfältigt, noch Dritten zugänglich gemacht werden, und sie darf durch den Empfänger oder Dritte auch nicht in anderer Weise mißbräuchlich verwertet werden

T	
MW	
QS	
TPSB	
TPK	
TPR	
TAVR	
MAVA	
MAVA-E	X
MWLR	
TPB	
TAVD	
MAVR	
MWLB	
TWSF	
TWST	
MAVT	
GTtepr.	
Konform	
MAMS	X